WINDOW SCHEDULE

	A	B	C	D
Type	PURPOSED MADE STEEL WINDOW SECTION	PURPOSED MADE STEEL WINDOW SECTION	PURPOSED MADE STEEL WINDOW SECTION	PURPOSED MADE STEEL WINDOW SECTION
WINDOW N0	W1 (5)	W2 (1)	W3 (4)	W4 (2)
Size	3400 × 1660	3400 × 1700	3400 × 600	600 × 600
FRAME: MAKE / MAT / FINISH	purposed made 75mm by 32mm window frame surround; steel finish	purposed made 75mm by 32mm window frame surround; steel finish	purposed made 75mm by 32mm window frame surround; steel finish	purposed made 75mm by 32mm window frame surround; steel finish
openings	two oppanable side panels four fixed middle panels	two oppen-nable side panels four fixed middle panel	two oppen-nable side panels four fixed middle panel	one oppen-nable upright panels
Grazing	4mm thick clear glass fixed with party to grazing	4mm thick clear glass fixed with party to grazing	4mm thick clear glass fixed with party to grazing	4mm thick translucent fixed with party to grazing
furniture	As supplied by the manufacturer burglar to be pre-fablicated and bolted to window frame across openings section to interials metal fly screening mesh on openable panels	As supplied by the manufacturer burglar to be pre-fablicated and bolted to window frame across openings section to interials metal fly screening mesh on openable panels	As supplied by the manufacturer burglar to be pre-fablicated and bolted to window frame across openings section to interials metal fly screening mesh on openable panels	As supplied by the manufacturer burglar to be pre-fablicated and bolted to window frame across openings section to interials metal fly screening mesh on openable panels

door schedule

	A	B	C	D
Type	STANDARD SOLID CORE S/D	STANDARD SOLID CORE S/D	STANDARD SOLID CORE S/D	STANDARD SOLID CORE S/D
No.	D1 (1)	D2 (3)	D3 (2)	D4 (1)
Size	900 × 2000	800 × 2400	700 × 2000	1200 × 2000
FRAME: MAKE / MAT / FINISH	Approved by the architect purpose made 75by32 door frame surround steel finish	Approved by the architect purpose made 75by32 door frame surround steel finish	Approved by the architect purpose made 75by32 door frame surround steel finish	Approved by the architect purpose made 75by32 door frame surround steel finish
LEAF: MAKE / MAT	Approved by the architect 600X2 X 2000	Approved by the architect 800 x2000 x 75mm GBD	Approved by the architect 700 x 2000 x 75mm GBD	Approved by the architect 600 x 200x2 x 75mm grazed balanced door
grazing				
IRONMONGERY: LOCK / FURN	N0.2" ADAM rite " m 1853 s deadlocks with 2 off 4036 cylinders and 2 off 4066 thumbturn cylinder or equal and approved 1 off "ADJ " rollercatch code HA4007 or equal and approved as supplied by manufacturer, 2 pairs door handles- solid art" ASPEN" 862/c91 300x22mm	N0.2" ADAM rite " m 1853 s deadlocks with 2 off 4036 cylinders and 2 off 4066 thumbturn cylinder or equal and approved 1 off "ADJ " rollercatch code HA4007 or equal and approved as supplied by manufacturer, 2 pairs door handles- solid art" ASPEN" 862/c91 300x22mm	N0.2" ADAM rite " m 1853 s deadlocks with 2 off 4036 cylinders and 2 off 4066 thumbturn cylinder or equal and approved 1 off "ADJ " rollercatch code HA4007 or equal and approved as supplied by manufacturer, 2 pairs door handles- solid art" ASPEN" 862/c91 300x22mm	N0.2" ADAM rite " m 1853 s deadlocks with 2 off 4036 cylinders and 2 off 4066 thumbturn cylinder or equal and approved 1 off "ADJ" rollercatch code HA4007 or equal and approved as supplied by manufacturer, 2 pairs door handles- solid art" ASPEN" 862/c91 300x22mm
ACCESS	PULL HANDLES OR EQUAL AND APPROVED	PULL HANDLES OR EQUAL AND APPROVED	PULL HANDLES OR EQUAL AND APPROVED	PULL HANDLES OR EQUAL AND APPROVED

GIRDER/ TRUSS FIXINGS

COLUMN/GIRDER CONNECTION:
10mm GUSSET PLATE FULLY WELDED TO COLUMN FLANGE. GIRDER VERTICAL BOLTED TO PLATE:
TOP 4-M20 @ 100mm from top
BOTTOM 2-M20 @ 100mm from bottom0

MAX GAP BETWEEN COLUMN/ GIRDER TO BE 20mm

COLUMN/TRUSS CONNECTION:
125x75x8 RSA CLEAT FULLY WELDED TO COLUMN WEB. TRUSS VERTICAL BOLTED TO PLATE:
TOP 3-M16 @ max 100mm from top
BOTTOM 2-M16 @ max 100mm from bottom

MAX GAP BETWEEN COLUMN/ TRUSS TO BE 25mm

GIRDER/TRUSS CONNECTION:
8mm GUSSET PLATE FULLY WELDED TO GIRDER VERTICAL. TRUSS VERTICAL BOLTED TO PLATE:
TOP 3-M16 @ max 100mm from top
BOTTOM 2-M16 @ max 100mm from bottom

MAX GAP BETWEEN COLUMN/ TRUSS TO BE 25mm

GENERAL FIXING DETAILS

BRACING FIXING DETAIL:
BRACING TO BE FIXED TO TRUSSES WITH 6mm GUSSET PLATE AND 2-M16 GRADE 8,8 BOLTS PER CONNECTION

PURLIN FIXING DETAIL:
PURLIN TO BE 5mm OF TRUSS. FIXING CLEAT, 75x50x6mm RSA TO BE WELDED TO TOP CHORD AND FIXED TO PURLIN WITH 4-M12 BOLTS.

FALSE RAFTER FIXING DETAIL:
FALSE RAFTER TO BE FIXED TO CONCRETE/BRICKWORK WITH M-16 RAWL BOLTS @ MAX 750mm CRS.

LONG TIE FIXING DETAIL:
LONG TIE TO HAVE 6mm ENDPLATE WELDED BOTH ENDS. TO BE BOLTED WITH 1-M16 BOLT TO VERTICAL OF BOTTOM CHORD. (GRADE 8.8 BOLT)

10.2 Other applications
- Foundation walls every 2nd course
- Ground floor walls for single story building every 4th course
- Ground floor walls for double story building every 4th course
- 1st floor walls for multi story building every 4th course
- All other walls * Retaining walls and boundary walls as specified
- Above all doors and windows, lintels maximum 3,0m: every course for 5 courses
- Lintels more than 3,0m: Refer specifications elsewhere

A. GENERAL

1. Drawings to be read in conjunction with all other engineering, architectural and other services drawings.
2. All site dimensions and levels must be checked against drawings and any discrepancies must be referred to the engineer for immediate attention.
3. No drawings to be scaled. Dimensions as indicated shall be used or deduced from given information.
4. Drawings to be checked and compared against other services for dimensions, details, openings, sleeves etc, before any building work may commence.
5. All materials and workmanship shall comply with the latest editions of the applicable SANS specifications and codes of practice.
6. Foundation work:

6.1 All foundation excavations must be inspected and approved by the engineer in writing before concrete is cast.
6.2 A concrete blinding layer will be required if foundation excavations are uneven or cannot be smoothed out before placing reinforcement.
6.3 When deeper excavations are ordered, mass concrete must be used to obtain the required founding level.

7. Soil Pressure: Foundations are designed for a maximum allowable soil pressure of 150 kPa at approximately 1,0m depth below the natural ground level.

6. Reinforcement:
Also refer bending schedules
R = Round mild steel at 250Mpa
Y = Deformed high tensile steel at 450MPa
Reinforcement must be securely fixed to prevent any movement during the placing of concrete. Only concrete or plastic spacers will be allowed.

B. CONCRETE

1. Concrete mixes and strengths
Reinforced concrete is to be from 19 mm aggregate and must attain a minimum cube strength of:

Item	14 days strength	28 days strength
Foundations	14 MPa	20 MPa
Columns	21 MPa	30 MPa
Retaining wall foundations	17 MPa	25 MPa
Walls and retaining walls	21 MPa	30 MPa
Slabs and beams	17 MPa	25 MPa

2. Cover to reinforcement:
Unless otherwise shown the cover to main bars shall be:

Item	Cover in mm
Foundations	75
Columns; to main rebar	40
Walls and retaining walls	30
Slabs; the larger of bar Ø or	25
Beams	30

3. Chamfers Provide a 20 x 20 mm chamfer on all outside corners of exposed 'off-shutter' concrete elements.
4. Tolerances: Building tolerances on all concrete work shall be as specified in SANS 1200 G-1980 with a grade 1 degree of accuracy and shall be carefully maintained throughout the construction.
5. Formwork : Formwork must be rigidly constructed to the exact dimensions of the concrete elements. Unless otherwise shown soffits of beams and slabs must have a positive camber of 1,0 mm for each 1,0 m of it's span.
7. Engineer's Inspection
All reinforcement must be inspected and approved by the engineer in writing before casting of concrete may commence.

9. Compaction of Concrete:
By means of mechanical vibrators only.

10. Curing of Concrete:
All concrete surfaces must be kept wet for a minimum period of 7 days after casting. Column wrapping with hesian or plastic is essential.

11. Construction joints
The positions of construction joints shall be agreed with the engineer prior to casting of concrete.

12. Removing of shuttering
Minimum shuttering time required to lapse before removal of shutters are:

Item	Min no off days
Sides of slabs and beams	2
Sides of walls and columns (wrapping required)	3
Soffits of slabs, without removing vertical props	10
Soffits of beams and cantilever slabs as well as other vertical props below slabs	21

8. Add-mixtures: Written approval from the Engineer shall be obtained for the use of any add-mixture or the use off ready mixed concrete, to pump concrete, or to use cement or cement blends other than ordinary Portland cement (OPC)

10. Brick force:
10.1 To be used in all brickwork walls at every 4th brick course or as specified. Minimum lap length = 300mm. Minimum distance between longitudinal wires to be equal to the width of wall minus 100mm.

11. Curing of all brickwork is essential and shall continue for at least 4 days after walls have been built, by keeping walls thoroughly wet throughout the day.

12. Pipes and conduits in walls must be in position before walls are built to allow bricklayers to build around the pipes and conduits. No chasing in brick walls will be allowed. In certain exceptional cases where chasing is permitted, only mechanical cutting will be allowed. No hammer and chisel will be permitted. Slots for conduits will be a triangular shape and as small as possible. Expanded metal, 150mm wide, must be fixed over the slots before the walls are plastered.

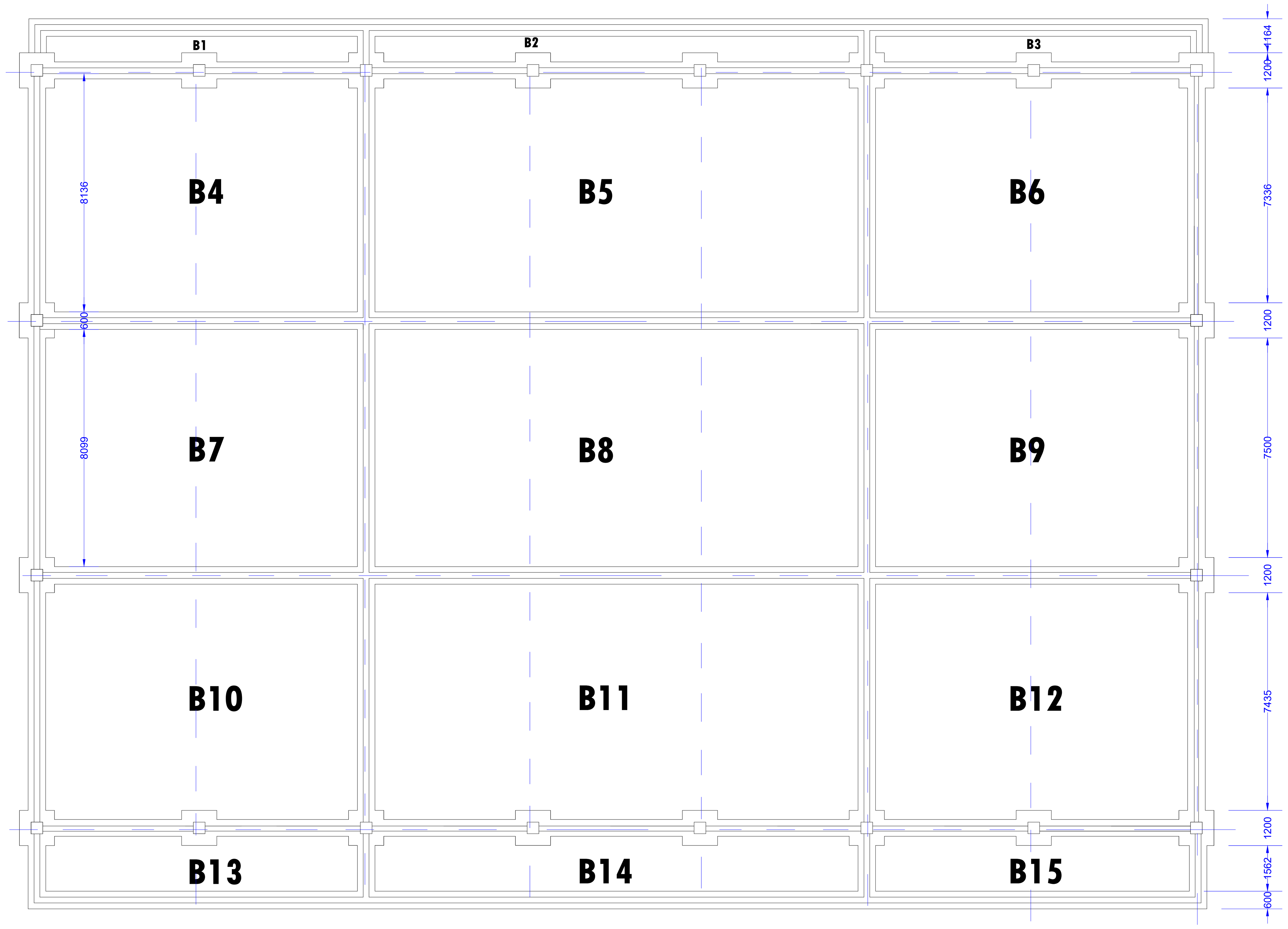

FLOOR PLAN

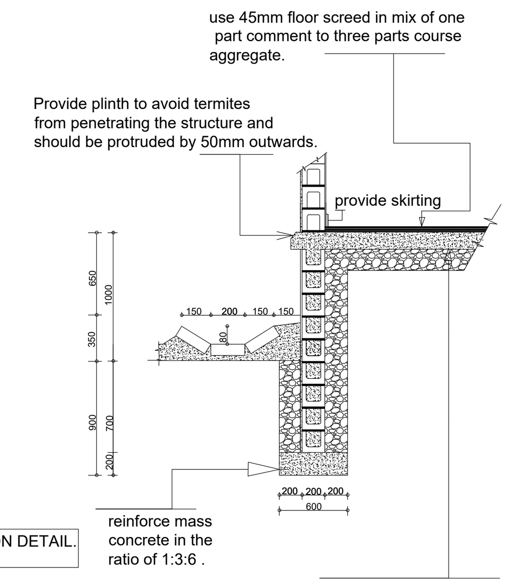

FOUNDATION DETAIL. OF A STRIP

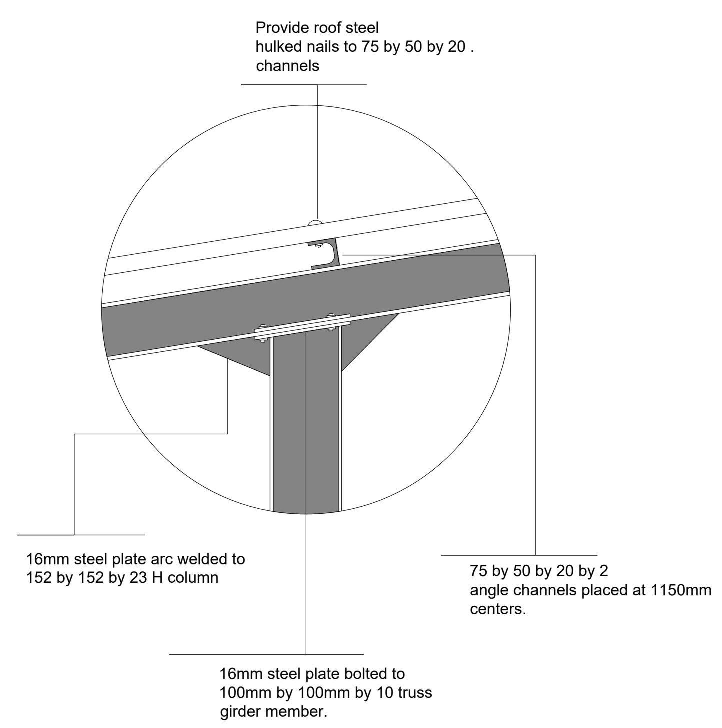

SEE DETAIL AB

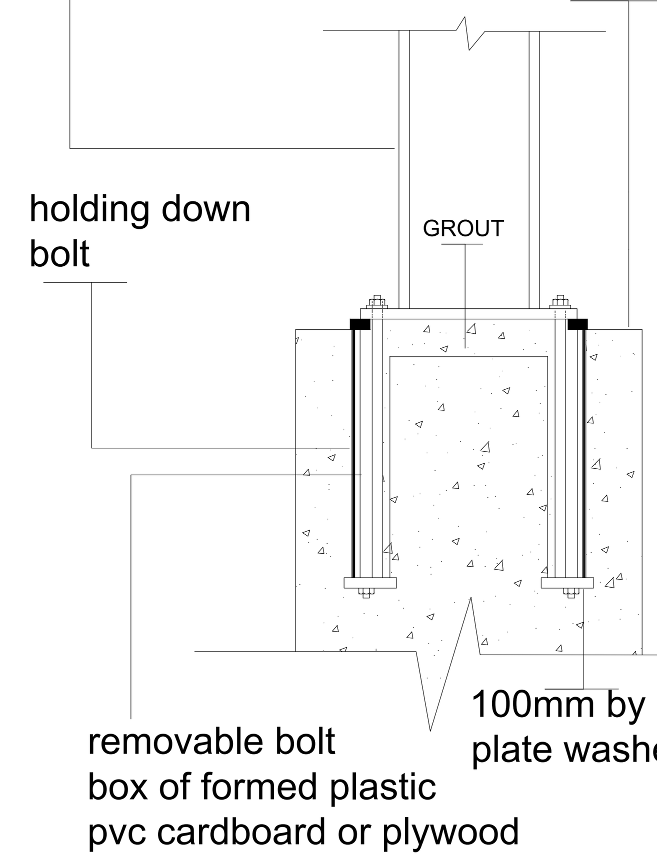

STRUCTURAL STEEL COLUMN BASE

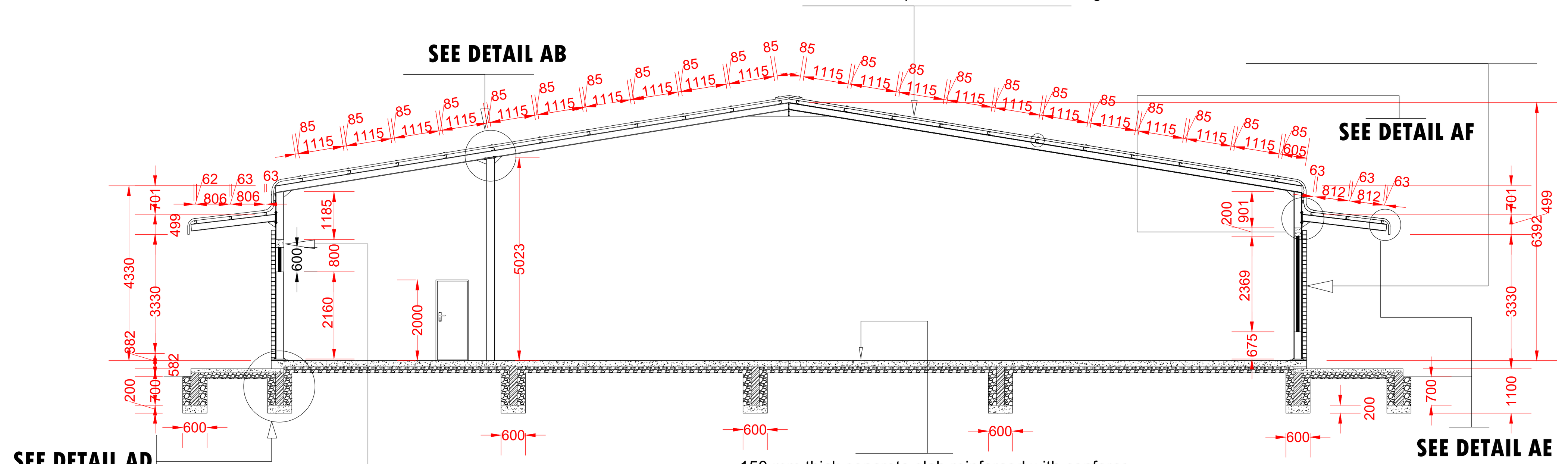

SECTION A-A, 1:100